EFRA ANNUAL SECTION MEETING
HOTEL Van Der Valk,
Brussels Belgium
9-10th of November 2019

Combined Minutes 1:8 IC and 1/10th IC Track

SATURDAY 9th of November 2019.

1. CHAIRMAN'S WELCOME

Mr Javier Garcia - Mrs Julie Thurston

The Chairmen opened the meeting at 13:07

2. APOLOGIES FOR ABSENCE

Apologies have been received from: Greece, Denmark and Luxemburg

COUNTRY	PRESENT	SECTION SUBSCR	EC 1/8	EC 1/10	WC 1/10	EC 40+ 1/8	EC +40 1/10th	WC GT8	EC GT8
AUSTRIA	Alain Levy	Y	1	3	0	1	1		
BELARUS									
BELGIUM	Leo Heremans	Y	1			3	2		
BULGARIA									
CROATIA	Present	Y	2						4
CZECH REP.								1	
DENMARK				3		1	3		
ESTONIA									
FINLAND									
FRANCE	Lionel Brashet	Y	8	15	2	5	5		2
GERMANY	Present	Y	10	10	3	10	5		2
GREAT BRITAIN	John Rusell	Y	7	3	3	4	1		4
GREECE				4	1				
HUNGARY									
IRELAND									
ITALY	Alessandro Paffundi	Y	10	15	3			5	
LUXEMBOURG									
MONACO	Nathalie Perillo	Y	1	2	1	1	1		
NETHERLANDS	Present	Y	5	5	3	8	5		
NORWAY	Present	Y	3	0					
POLAND									
PORTUGAL	Present	Y	1	1					
RUSSIA									
SLOVAK REP.								1	
SLOVENIA									
SPAIN	Enrique Esteve	Y	15	3					
SWEDEN									

SWITZERLAND	Giacomo Moretti	Y	4	5	2	10	5		6
TURKEY									
TOTAL		**14**	**68**	**69**	**18**	**43**	**28**	**7**	**18**

Member Countries presents, section subscription, allocations etc 14 members present with sactions 2019 to vote. Croatia in the beginning wasn't in the list, but they will apply for the section and we give rights to vote.

Allocations can be changed till January 21th 2020.

Other persons present: Gary Culver

3. MINUTES OF 2018 SECTION MEETING

November 2018— Brussels,Belgium

Matters arising from the minutes: NO MATTERS.

The minutes were accepted as written at the AGM 2018. **Passed unanimously.**

The following person was elected to check the minutes of this year: Giacomo Moretti from Switzerland SRCCA

4. CORRESPONDENCE RECEIVED

Any correspondences from the 2019 season……

Correspondence received from AECAR and BRCA regarding letter that EFRA sent in February make a statement to get events longer that rule says. Section Chairmen made explanations about what happened and what was the reason to take that decision.

5. CHAIRMAN'S REPORT

A full report of the Season is presented by Section Chairmen.

6. PRESENTATIONS FOR APPLICATIONS EC AND GP'S 2020/21

The section has received the following applications to host coming EFRA events. These proposals have reached us in time, not other proposal will be accepted after distribution of the agenda.

Applications for 1/8 IC Track

Year/Date	Alt. Date	Status	Country	Venue
2020		GP	Switzerland	Lostallo
2020		GP	Netherlands	Rucphen
2020		GP	Germany	Ettlingen
2020		GP	Italy	Bologna
~~2020~~	NO IR & GP's of GT 2020, only EC	~~IR GT~~	~~Italy~~	~~Cassino~~
2021		EC GT	Croatia	Zagreb
2021		EC GT	Italy	Locorotondo
2021		EC	Portugal	Vila Real
2021		EC	Italy	Cassino
2021		EC 40+	Switzerland	Lostallo

Final Race calendar for 1/8th IC track 2020

Year/Date	Alt. Date	Status	Country	Venue
2020	3-5th april	GP Series	Italy	Bologna
2020	22th – 24th May	GP Series	Netherlands	Rucphen
2020	3th – 8th August	EC	Spain	Almussafes(Valencia)
2020	14th – 19th September	EC 40+	Netherlands	Apeldoorn
2020	22th – 27th June	EC GT 1/8	Switzerland	Lostallo

Future Race calendar for 1/8th IC track.

Year/Date	Alt. Date	Status	Country	Venue
2021		EC	Portugal	Vilareal
2021		EC40+	Switzerland	Lostallo
2021		EC GT	Croatia	Zagreb

Applications for 1/10 IC Track

Year/Date	Alt. Date	Status	Country	Venue
2020		GP	Switzerland	Lostallo
2020		GP	Netherlands	Rucphen
2020		GP	Italy	Bologna
2020		GP	Germany	Ettlingen
2021		EC	Italy	Giardini Naxos (Sicily)
2021		EC 40+	Switzerland	Lostallo

Final Race calendar for 1/10th IC track 2020

Year/Date	Alt. Date	Status	Country	Venue
2020	3-5th april	GP Series	Italy	Bologna
2020	22th – 24th May	GP Series	Netherlands	Rucphen
2020	14th-19th of September	EC 40+	Netherlands	Apeldoorn
2020	6th -11th July	EC	Italy	Gubbio
2020	25th sept – 4h October	WC	Australia	Brisbane

Future Race calendar for 1/10th IC track

Year/Date	Alt. Date	Status	Country	Venue
2021		EC	Italy	Messina
2021		EC40+	Switzerland	Lostallo

7. ALLOCATIONS

Allocations were made to each country as printed in the table form under item 2 on the agenda.
All Federations MUST confirm their FINAL Allocation Numbers for each event to the relevant Section Chairman by 21th. January LATEST

8. RULE PROPOSALS 1/8 and 1/10 IC TRACK

Note: The EFRA Committee has studied all received proposals and has come to an opinion over each one, The EFRA Section Chairman will inform the floor of such positions.

APPENDIX 1 1/8th and 1/10th SCALE I.C. TRACK CARS Combined

Current Rule

2.1.

European Championships are held in following classes:
a) The European Championship Sportscars/GT-P/Group-C ECA and ECB will be held on the 4th weekend of July. The European Championship 1/10th Touring Car Sedan bodies ECA and ECB will be held on the 3rd weekend of August.
In the year there is an IFMAR World Championship outside the EFRA Bloc, dates between EC and WC must be separated with at least 4 free weekends between the finals.
In the years there is an IFMAR WC in the EFRA Bloc, there will be no EC-A (see schedule IFMAR, www.ifmar.org)
It will be open to 64 drivers in the following order: current World Championship (if European) in 1/8th IC on road and 1/10th 200mm IC, current European Championship in 1/8th IC and 1/10th 200mm IC, 25 EFRA A drivers and 35 drivers (or numbers of drivers necessary) to complete 64 allocations. 35 drivers will bump up in Controlled Time Practice during the event. One special EFRA medal will be awarded to the fastest driver under 17 year in each class. So everybody of 16 years during the race dates, or younger can compete for this medal. One trophy must be awarded by the Organizer for each class.
b) The B-European Championship 1/8th Sportscars/GT-P/Group-C will be open to: All drivers who want to attend the race, except drivers who have been included in European Championship 'A'.The Euro B for 1/10th will be open for: All drivers who want to attend race except drivers who have been included in European Championship 'A'.For both classes: The winner of the B-EC will become EFRA 'A' driver immediately and will retain A-registration for 2 years.
c) The EFRA ranking list is based on the overall result of the EFRA GP series.
The total result of this list will decide upon A and B licence just before European Championship.
d) European Championship 1/8th Track 40+ and 1/10th 200 mm 40+. This will be one combined event. EC 40+: Open to all drivers of 40 years, including those who become 40 that year and older.
e) EFRA GP series. EFRA GP Series will be held in the first part of the year (March-June). Minimum 2 and maximum 3 GP's will determine EFRA A and EFRA B drivers. The first 25 drivers will be EFRA A drivers, the rest of the drivers will be EFRA B drivers in the current year. EFRA GP series (1/8th and 1/10th 200mm) are run in combined events. EFRA GP meetings will use the points system, with the drivers best 2 meetings out of the3 to count. If EFRA GP series is held with only 2 meetings, all the races will count. EFRA GP series will follow GP point system (see 3.3.6). To solve Overall Result of the EFRA GP SERIES in case of tie, driver with single highest

finishing position in either of the best Rounds that counted will be awarded the tie (1+3=4 beat 2+2=4) . If tie continue then discarded round will solve the tie.
f) NATIONS CUP. At every European Championship A EFRA will hold a Nations Cup, with drivers competing as a team representing their countries. When race is over, the best two (2) drivers of each country will represent their country at this Nations Cup. Both results will be added together by points (according to the rule 3.3.6) and give the result of their National Team.

Proposal

European Championships are held in following classes:
a) The European Championship 1/8th IC PRO Class and European Championship 1/8th IC SPORT Class will be held on the 4th weekend of July.
The European Championship 1/10th Touring Car Sedan bodies PRO Class and European Championship 1/10th Touring Car Sedan bodies SPORT Class will be held on the 3rd weekend of August.
In the year there is an IFMAR World Championship outside the EFRA Bloc, dates between EC and WC must be separated with at least 4 free weekends between the finals.
In the years there is an IFMAR WC in the EFRA Bloc, there will be no European Championship PRO Class (see schedule IFMAR, www.ifmar.org)
One special EFRA medal will be awarded to the fastest driver under 17 year in each class. So everybody of 16 years old at 1st of January, or younger can compete for this medal. One trophy must be awarded by the Organizer for each class.
b) The European Championship 1/8th SPORT class will be open to: All drivers who want to attend the race, except drivers who have ranked in the first twenty five (25) places of any of the preceding two (2) European Championship 1/8th IC PRO class (old EC-A) and to any driver who has ever taken part in an EFRA-IFMAR European Championship A main final in any class of racing in last 5 years. The European Championship 1/10th Touring Car Sedan Bodies SPORT Class will be open to: All drivers who want to attend race except drivers who have ranked in the first twenty five (25) places of any of the preceding two (2) European Championship 1/10th Touring Car Sedan Bodies IC PRO class (old EC-A) and to any driver who has taken part yet in an EFRA-IFMAR European Championship A main final in any class in last 5 years. For both classes: The winner of the European Championship SPORT class cannot participate in SPORT Class for next 5 years additionally with the other restrictions.
c) The European Championship GT8 IC will be held on the 2nd weekend of September.
d) European Championship 1/8th Track 40+ and 1/10th 200 mm 40+. This will be one combined event. EC 40+: Open to all drivers of 40 years, including those who become 40 that year and older.
e) EFRA GP series. EFRA GP Series will be held in the first part of the year (March-June). Minimum 2 and maximum 3 GP's ~~will determine EFRA A and EFRA B drivers~~. EFRA GP series (1/8th and 1/10th 200mm) are run in combined events. EFRA GP meetings will use the points system, with the drivers best 2 meetings out of the 3 to count. If EFRA GP series is held with only 2 meetings, all the races will count. EFRA GP series will follow GP3 point system (see 3.3.6). To solve Overall Result of the EFRA GP SERIES in case of tie, driver with single highest finishing position in either of the best Rounds that counted will be awarded the tie (1+3=4 beat 2+2=4) . If tie continue then discarded round will solve the tie.
f) NATIONS CUP. At every European Championship A EFRA will hold a Nations Cup, with drivers competing as a team representing their countries. When race is over, the best two (2) drivers of each country will represent their country at this Nations Cup. Both results will be added together by points (according to the rule 3.3.6) and give the result of their National Team.

Remarks

Some changes made in that rule as follows:
- Change the name of European Championship: PRO Class and SPORT Class instead of Euro A & B.
- Reduce Junior age to 16 instead of 17.
- Change Classification system for Euro A & B. Now, we propose that driver can decide if they want to race in PRO Class or in SPORT Class. Everybody can participate in PRO Class and we make restrictions to participate in SPORT Class.
- Include GT8 as official class with Official European Championship.
- Skip EFRA ranking list. No more EFRA A and B drivers anymore.
- EFRA GP SERIES. Skip 25 driver in the A list and we will use GP3 (3.3.6) point system for all races.

Proposed by: EFRA, Garcia Javier

Proposal Status:

Seconded by: Italy o Not Seconded

The proposal: o Passed Unanimously o Passed with .... for, ... against and .... abstentions.

o Rejected with .... for, ... against and .... abstentions. o Amended

Current Rule

2.1.

European Championships are held in following classes:…….

d) European Championship 1/8th Track 40+ and 1/10th 200 mm 40+. This will be one combined event. EC 40+: Open to all drivers of 40 years, including those who become 40 that year and older.
……..

Proposal

European Championships are held in following classes:…..

d) European Championship 1/8th Track 40+ and 1/10th 200 mm 40+ and GT8 (nitro). This will be one combined event. EC 40+: Open to all drivers of 40 years, including those who become 40 that year and older.
…….

Remarks

This is new because in 2020 the first GT8 EC will take place

Proposed by: BRCA, Russell, John

Proposal Status:

Seconded by: Switzerland o Not Seconded

The proposal: o Passed Unanimously o Passed with .... for, ... against and .... abstentions.

o Rejected with 2 for, 10 against and 2 abstentions. o Amended

---

Current Rule

2.2.

Free practice for an EC is only allowed from the Wednesday preceding the Race. It will not be allowed for competitors in the event to practice for 10 days before this Wednesday (see also Gen. 8.1.) For 1/8th and 1/10th due to A&B held at the same event: Pit lane refuelling may be forbidden during free practice at an EC if it is necessary to facilitate a quicker turn-around of drivers (every five minutes).

Proposal

Free practice for an EC PRO Class is only allowed from the Wednesday preceding the Race. For EC SPORT Class, Free Practice is allowed from Monday preceding the race. For the rest of EC's (EC+40 and EC GT8) track will be open from Monday. It will not be allowed for all competitors in the event to practice for 10 days before this Monday (see also Gen. 8.1.) For 1/8th and 1/10th due to PRO Class & SPORT Class held at the same event: Pit lane refuelling may be forbidden during free practice at an EC if it is necessary to facilitate a quicker turn-around of drivers (every five minutes).

Remarks

The meaning of this proposal is to create additional value and practice for drivers in SPORT class. Some of the feedback got it with free practice have been in two different ways: For Official drivers 3 days of practice is too much and the opinion of average drivers is that they want as much practice as possible because is their free time and holidays. With this new change, we tried to compensate both ways.
On the other hand, manufacturers can work full time with amateur drivers first two days of practice due no pro drivers on the track and average drivers can get more track time.

Proposed by: EFRA, Garcia Javier

Proposal Status:

Seconded by: Italy o Not Seconded

The proposal: o Passed Unanimously o Passed with .... for, ... against and .... abstentions.

o Rejected with .... for, ... against and .... abstentions. o Amended

---

Current Rule

2.4.

General Qualifying format for EC's and GP's:
……..
Super-pole: Drivers ranked 2nd to 5th will drive the 'super-pole' individually on the track, for 6 consecutive laps including warm-up on controlled tyres.
Procedure for the Super Pole will be: 5 minutes warm up all participants together to clean the track . Then, one by one 3 minutes warm up for each driver in flying start system, and 6 consecutive laps . (Remark: when warm up time is over and driver cross the starting line, he cannot enter in the pits) The 'super-pole' running order will be 5, 4, 3, 2. The driver that scores the fastest lap will also move up straight to the 'Main' Final and take the second position on the starting grid…….

Proposal

General Qualifying format for EC's ~~and GP's~~ :
…….
Super-pole: Drivers ranked 2nd to 5th will drive the 'super-pole' individually on the track, for 6 consecutive laps including warm-up on controlled tyres. Drivers in Super Pole can use a new set of tires or used sets in their bag in the controlled area.
Procedure for the Super Pole will be: 5 minutes warm up all participants together to clean the track . Then, one by one 3 minutes warm up for each driver in flying start system, and 6 consecutive laps . (Remark: when warm up time is over and driver cross the starting line, he cannot enter in the pits) The 'super-pole' running order will be 5, 4, 3, 2. The driver that scores the fastest lap will also move up straight to the 'Main' Final and take the second position on the starting grid…….

Remarks

Skip the GP's in Qualifying format due a new system and clarification in Super Pole about which tires can be used.

Proposed by: EFRA, Garcla Javier

Proposal Status:

Seconded by: Monaco o Not Seconded

The proposal: o Passed Unanimously o Passed with .... for, ... against and .... abstentions.

o Rejected with .... for, ... against and .... abstentions. o Amended

---

The Rule is new:

Proposal

2.4.1 . General Qualifying format for EFRA GP's .
For 1/8th and 1/10th : 3 groups of Qualification will be run irrespective of the number of drivers . After Control Timed practice groups of qualification will be divided as follow according to the ranking :

- Q3 : first 5 drivers in Control Timed Practice will be classified directly in the last round according to the ranking .
- Q2 : thirty percent of drivers (30%) after Control Timed practice minus drivers directly classified in Q3 (first 5) will

be classified directly in Q2 . In case of 30% of drivers result a non-integer number , the lowest integer number will be taken (i . e . 12 , 5 will result 12 drivers) .
- Q1 : Seventy percent remaining (70%) of drivers after Control Time practice will race first round of qualification . In case of 70% of drivers result a non-integer number , the highest integer number will be taken (i . e . 50 , 5 will result 51 drivers).

Qualification procedure will start with procedure as follow:

Q1 : 3 rounds of 10 minutes in flying start system (see 9 . 2 . b General rules) . The best 3 consecutives laps in the 3 rounds combined will be used to stablish the qualifying result in Q1 . The best 12 drivers in the ranking after 3 rounds will bump up to the Q2 .
Drivers directly classified for Q3 will have a 10 minutes free practice between Q1 and Q2 .
Q2 : Ranking list of Q2 will be based according to the best 3 consecutive laps for drivers who classified directly to the Q2 and drivers who bump up for Q1 (all together) . For Q2 , 2 rounds of 10 minutes in flying start system (see 9 . 2 . b General rules) . The best 3 consecutive laps in the 2 rounds combined will be used to stablish the qualifying result in Q2 . The best 7 drivers in the ranking after 2 rounds will bump up to the Q3 .
Q3 : Ranking list of Q3 will be based according to the best 3 consecutive laps from positions 1 to 12 . For Q3 , only 1 round of 10 minutes in flying start system (see 9 . 2 . b General Rules) . The best 3 consecutive laps in the round combined will be used to stablish the qualifying result in Q3 . The best 3 drivers will bump up directly to the Main Final .

The final ranking for subfinals will be based according of the results of Q3 , Q2 and Q1 . These results will not be combined which mean that results of different rounds of qualification will be used to arrange subfinals (i . e . position 4 in Q3 will be 1st in semi A , position 5 in Q3 will be 1st in Semi B and so on . . .) .
Length and number of rounds can be adjusted according to the number of entries if needed in agreement with EFRA Official present at the event .
If two (or more) competitors achieve an equal time in best 3 consecutive laps , the driver with single best lap of the three laps counted will solve the tie . In the event of continuing tie , then the second-best lap will count to solve the tie and so on .
Rain procedure : Only rounds ran under same conditions will count . Same conditions mean : no differences in average lap time by more than 20% . The Race Director together with the referees will make the final decision . For any other procedure under rain conditions will follow rule 4 . 5 appendix 1 .

Remarks

New Qualification system for EFRA GP SERIES .

Proposed by: EFRA, Garcia Javier

Proposal Status:

Seconded by: Croatia o Not Seconded

The proposal: o Passed Unanimously o Passed with 11 for, 3 against and 0 abstentions.

o Rejected with .... for, ... against and .... abstentions. o Amended

---

Current Rule

2.5.

Time Schedule
The time schedule should not be rigid but adapted to the number of entrants. As a guideline at EC's with 100 or more entrants the schedule should be as follows:
Wednesday: Free or Controlled Practice
Wednesday & Thursday: technical inspection All cars must pass technical inspection before Controlled Timed Practice.
Thursday: Controlled Practice, Controlled Timed Practice and Qualifying 1 & 2 in the afternoon.
Friday: Qualifying Rounds 3 to 5, 'Super-pole' (for 2,3,4 and 5 Top Qualifiers), lower finals up to 1/64.
Saturday: 1/32 upwards,1/16th, 1/8, 1/4 final; Practice 2 direct Qualifiers, 1/2 final, final.
For EFRA GP series as a guideline:
Friday: Free or controlled practice.

Saturday: Controlled practice, Controlled time practice, Qualifying and 'Super-pole'.
Sundays: Finals.
……..

Proposal

Time Schedule
The time schedule should not be rigid but adapted to the number of entrants. As a guideline at EC's with 100 or more entrants the schedule should be as follows:
Monday & Tuesday: Free or Controlled Practice for SPORT Class. For rest of EC's free or Controlled practice.
Wednesday: Free or Controlled Practice for SPORT Class and PRO Class
Wednesday & Thursday: technical inspection All cars must pass technical inspection before Controlled Timed Practice.
Thursday: Controlled Practice, Controlled Timed Practice and Qualifying 1 & 2 in the afternoon.
Friday: Qualifying Rounds 3 to 5, 'Super-pole' (for 2,3,4 and 5 Top Qualifiers), lower finals up to 1/64.
Saturday: 1/32 upwards,1/16th, 1/8, 1/4 final; Practice 2 direct Qualifiers, 1/2 final, final.
For EFRA GP series as a guideline:
Thursday & Friday: Free or controlled practice.
Saturday: Controlled practice, Controlled time practice and Qualifying .
Sundays: Finals……
…..

Remarks

- New format of Euro PRO Class and SPORT Class with more track time and practice for SPORT Class
- Skip Super-Pole in EFRA GP SERIES

Proposed by: EFRA, Garcia Collado Javier

Proposal Status:

Seconded by: Austria o Not Seconded

The proposal: o Passed Unanimously o Passed with .... for, ... against and .... abstentions.

o Rejected with .... for, ... against and .... abstentions. o Amended

---

The Rule is new

Proposal

2.6.1. General format of sub-finals and main final at GP's
The lower finals are 20 minutes up to 1/64th . Time for finals higher than 1/64th to be set for Race director in agreement with EFRA official present.
Sub-finals : The best 3 in each sub-final move up to the next final .
Semi-finals : The best 3 in each semi-final move up to the final , plus the best remaining 2 drivers from the 2 semi-finals combined . When racing conditions are different in the two semi-finals , the best 4 of each semi-final move up to the main final .
Last chance final : A special final to all drivers of semi-finals who not bump up into the final (12 drivers in total) . Duration will be 15 minutes and winner of the final will bump up into the final with number 12. The order of starting grid in the Last chance final will be according to the results in laps and time on both semi-finals combined.
Main finals : Main final will be run with 12 drivers in 2 legs of 25 minutes . Both legs will count for the final result. If only one leg will be run for any condition, only one leg will count for the final result. The winner determined from the combined main finals will be the champion. The winner of the main finals will be the driver with best laps and times combined.
Starting order for the drivers who moved up to the main final is based on number of laps and time from position number 4 to 11 . Starting order in both Finals will be the same, according to driver number. In different circumstances it will be number 1 from semi-final A who gets 4 and the number 1 from semi-final B who gets number 5 etc .
After Practice , direct Qualifiers cars (TQ , 2nd and 3rd of Q3) must be kept in Parc Fermé. Additionally , after first semi-final all cars will be put in Parc Fermé in technical inspection and they will be released after completion of

the technical inspection of the 2nd semi-final . This will give all drivers that procced to the final equal time for preparation .

Remarks

New sub-finals and main final system for GP's

Proposed by: EFRA, Garcia Javier

Proposal Status:

Amended to change point system in Final 1 and 2 to laps and times to consider the winner of the GP. Amended seconded by Austria.

Seconded by: Switzerland o Not Seconded

The proposal: o Passed Unanimously o Passed with 12 for, 0 against and 2 abstentions.

o Rejected with .... for, ... against and .... abstentions. o Amended

---

Current Rule

3.13.

A start/finish line must be painted across the track, preferably in front of the time keeping position.
The first start line box must be located more than 10 mtr. away from the following corner.

Proposal

A start/finish line must be painted across the track, preferably in front of the time keeping position.
The first start line box shall be located at the beginning of the longest straight or a slower part of the track.

Remarks

It is much better for the best qualified drivers to "get away" around the first corner. The way it is today they are often T-boned by the drivers from the back of the field. In general r/c car driving is now so higly competitive that one mistake or incident normally means thay you will not advance to the higher final. The grip is normally high and the engine power is nowadays extreme. This means 10 cars charge down the straight for the first corner. There is normally always an incident due to late braking etc. It is not fair that the best qualified drivers can be put out by drivers from higher start numbers as "easily" as today. The driver causing the incident might get a stop-n-go. But that normally does not help the driver that was hit. We see a lot of these things happen, even at the Euros A in the higher finals.

Proposed by: NMF, Hagen Marthe Moen

Proposal Status:

Seconded by: BRCA o Not Seconded

The proposal: o Passed Unanimously o Passed with .... for, ... against and .... abstentions.

o Rejected with 5 for, 7 against and 0 abstentions. o Amended

---

Current Rule

3.14.

Only a Le Mans type of start will be used. For Le Mans type of starts, 10 numbered boxes will be located on the edge of the track, at an angle of 20-45 degrees to the track, min. 2 m. and max. 4 m. apart. The boxes must be 70-100 cm long and 30-40 cm wide.

Proposal

Only a Le Mans type of start will be used. For Le Mans type of starts, 12 numbered boxes will be located on the edge of the track, at an angle of 20-45 degrees to the track, min. 4 m apart,. starting position can be approved by

RACE DIRECTOR in discussion with highest EFRA official . The boxes must be 70-100 cm long and 30-40 cm wide.

Remarks

To give a clear run for all to make the first corner without incident

Proposed by: EFRA, Thurston Julie

Proposal Status:

Amended to change the order of sentence. "starting position can be approved by RACE DIRECTOR in discussion with highest EFRA official" instead of "starting position can be approved by highest EFRA official at race in discussion with Race director and Organiser" Amended seconced by Austria.

Seconded by: Austria o Not Seconded

The proposal: o Passed Unanimously o Passed with .... for, ... against and .... abstentions.

o Rejected with .... for, ... against and .... abstentions. o Amended

---

Current Rule

5.1.1.

SPECIFICATIONS FOR CONTROL TIRE
Definition of Control Tire: 1 set (front and rear), 1 brand, 1 diameter front, 1 diameter rear, 1 shore for front and 1 shore for rear.
A Control tire is mandatory for: Controlled time practice (which are used forseeding), Qualifying, Sub-finals and final. Price will be fixed for all EFRA season and will be revised in each AGM:
Price for 2019 1/8th: 20 EUR per set
Price for 2019 1/10th 200mm: 12 EUR per set
Diameters for 1/8th: 69.0m front and 76.0mm rear
Shore hardness for 1/8th: 32 front and 35 rear (final number of shore after consultation with the organiser).
……

Proposal

Definition of Control Tyre: 1 set (front and rear), 1 brand, 1 diameter front, 1 diameter rear, 1 shore for front and 1 shore for rear.
A Control tyre is mandatory for: Controlled time practice (which are used for seeding), Qualifying, Sub-finals and final. Price will be fixed for all EFRA season and will be revised in each AGM:
Price for 2020 1/8th: 20 EUR per set
Price for 2020 1/10th 200mm:12 EUR per set
Diameters for 1/8th: 69.0m front and 76.0mm rear
Diameters for 1/8th electric stock: 64mm front and 70mm rear - tire trueing in the pit shall be allowed as there exist many different split options between the brands.
Shore hardness for 1/8th: 32 front and 35 rear (final number of shore after consultation with the organiser). The mandatory quantity of tires shall be fixed by considering different tire wear of the different classes.1/8th electric stock class needs less tires.

……

Remarks

EFRA shall make a difference in mandatory handout tire quantities between nitro EFRA EUROs and 1/8 electric races as the runtimes of the heats and the tire wear are not the same. As all tire suppliers offer 1/8 pan tires with smaller diameters (eg 70mm front 64mm rear) it shall not be any problem to get them for handout tires for official EFRA events. As every brand has different split of front and rear tires, it shall be permitted to true tires down in the pit area for individual needs...

Proposed by: OFMAV, STEINBOCK Gerhard

Proposal Status:

Seconded by: Netherlands o Not Seconded

The proposal: o Passed Unanimously o Passed with .... for, ... against and .... abstentions.

o Rejected with .... for, ... against and .... abstentions. o Amended

---

Current Rule

6.12.

Wings and Spoilers
Separate wings and spoilers are not allowed. Only a Gurney strip mounted on the rear of the body is allowed. The "Gurney" should not be higher than 5mm with a 90 degrees angle (see drawing). Maximum height for the body, side and rear wing is 170mm with the chasis raised on 20 mm blocs. This maximum height with the Gurney Strip is 180 mm on a 20 mm spacer. The maximum overhang is 100 mm measured from the rear axle centre point. See drawing.
Maximum dimensions: Group 'C', GT-P, Can-Am, GT1 and GT2 cars max . width: 267 mm max . height: 170 mm (on 20 mm blocs) Overall, maximum height including a Gurney strip 180 mm (on 20 mm blocs) max distance behind rear axle: 100 mm (110 mm for 2wd & flat chassis cars

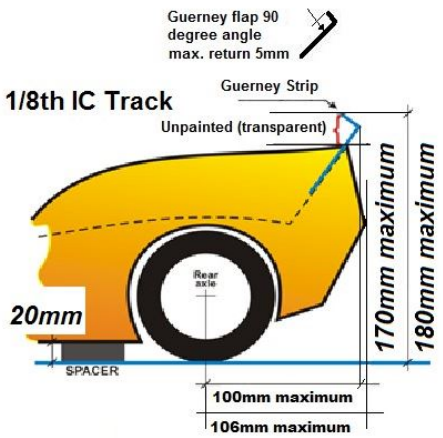

Proposal

6 .12 . Wings and Spoilers:
Separate wings and spoilers are not allowed. Only a Gurney strip mounted on the rear of the body is allowed . The "Gurney" should not be higher than 5mm with a 90 degrees angle (see drawing) . Maximum height for the body, side and rear wing is 170mm with the chassis raised on 20 mm blocs. This maximum height with the Gurney Strip is 180 mm on a 20 mm spacer. The maximum overhang is 100 mm measured from the rear axle centre point. See drawing.
Maximum dimensions: Group "C", GT-P, Can-Am, GT1 and GT2 cars max . width: 267 mm max . height: 170 mm (180mm for flat chassis pancars) (on 20 mm blocs) Overall, maximum height including a Gurney strip 180 mm (190mm for flat chassis pancars) (on 20 mm blocs) max distance behind rear axle: 100 mm (110 mm for 2wd & flat chassis cars).

Remarks

Explanation; On bumpy tracks these pancars tend to lift of the track. Extensive testing has show that when adjusting the rear of the body higher this " liftoff " tendency is greatly reduced. So for safety and less flyoff`s this is the way to go.

Proposed by: NOMAC, Houtman Raymond

Proposal Status:

Seconded by: Austria o Not Seconded

The proposal: o Passed Unanimously o Passed with 13 for, ... against and 1 abstentions.

o Rejected with .... for, ... against and .... abstentions. o Amended

---

Current Rule

7.12.

Wings and spoilers :
-One wing and one spoiler may be mounted to any car (if the original full-size car had more , it is allowed to do the same) . -Wing and spoiler must be made from a flexible material .
-Wing and spoiler may not be fixed to body with piano wire (they must be mounted directly to the body) .
-Wing and spoiler must not protrude outside the maximum height and width of the body (incl . the side dams) .
-Rear wings must be mounted in the same place as was intended by the body manufacturer . The overhang must not exceed 10 mm at the furthest point , measured from the most rear point of the body .
Side dams may be fitted but must be a reasonable representation of those fitted do the original car , fit in a rectangle with the measurements defined , and must not project above the height of the roofline .
-The height of the wing may be adjusted but the wing , incl . side dams must not extend higher than the roofline .
-Wings (excl . side dams) are to be of single moulded construction (no flat packs/bend your own) .

Proposal

Wings and spoilers :
-One wing and one spoiler may be mounted to any car (if the original full-size car had more , it is allowed to do the same) . -Wing and spoiler must be made from a flexible material .
-Wing and spoiler may not be fixed to body with piano wire (they must be mounted directly to the body) .
-Wing and spoiler must not protrude outside the maximum height and width of the body (incl . the side dams) .
-Rear wings must be mounted in the same place as was intended by the body manufacturer . The overhang must not exceed 10 mm at the furthest point , measured from the most rear point of the body .
Side dams may be fitted but must be a reasonable representation of those fitted do the original car , fit in a rectangle with the measurements defined , and must not project above the height of the roofline .
-The height of the wing may be adjusted but the wing , incl . side dams must not extend higher than the roofline .
-Wings (excl . side dams) are to be of single moulded construction (no flat packs/bend your own). –
-No stickers to be allowed to be stuck on top of bodyshell .

Remarks

To stack stickers on top of body shell can result in the roofline being extended hence then so can the wing and side dams .

Proposed by: EFRA, Thurston Julie

Proposal Status:

Seconded by: Holland o Not Seconded

The proposal: o Passed Unanimously o Passed with .... for, ... against and .... abstentions.

o Rejected with .... for, ... against and .... abstentions. o Amended

---

Delete Current Rule

8.1.

To qualify for an 'A' licence , a driver must be placed 1-25 in the EFRA ranking system . (All other drivers will be classified EFRA 'B' licensed) . These drivers must be approved by their own National Association as having sufficient experience and skill to take part in an International competition . World Champion will retain 'A' licence for the next 2 years . European Champion will retain 'A' licence for the next 2 years . European Champion B-drivers will retain 'A' licence for the next 2 years .
The EFRA ranking list is based on the overall result in the EFRA GP series during year in progress . The total result of this list will decide upon A and B licence . For all the races involved in this ranking , points can be achieved for the result after the finals (see General rules points table section 3 . 3 . 6)

Remarks

After voting in a new system for EFRA Euro PRO Class & SPORT Class , it's no sense to keep this chapter in the appendix , because EFRA GP series will be a separate championship with no influence in the category of A and B drivers anymore .

Proposed by: EFRA, Garcia Javier

Proposal Status:

Seconded by: Austria o Not Seconded

The proposal: Passed Unanimously o Passed with .... for, ... against and .... abstentions.

o Rejected with .... for, ... against and .... abstentions. o Amended

---

The Rule is New

Proposal

9 . 6 The complete car and fuel gun to be over the board for fuelling . Failing this will result in a stop and go penalty or drive through depending on the track , and discretion of Referee .

Remarks

To clarify whether it is the car, fuel gun, fuel tank that needs to be over the board when re-fuelling .

Proposed by: EFRA, Thurston Julie

Proposal Status:

Seconded by: Spain o Not Seconded

The proposal: o Passed Unanimously o Passed with .... for, ... against and .... abstentions.

o Rejected with .... for, ... against and .... abstentions. o Amended

---

Current Rule

10.3

Body Rules
Bodies must be commercially available 1/8th scale GT1, GT2, Super GT, DTM, or V8 Supercar cars, 2 door GT bodies …

An additional hole for refueling in the roof of 50mm is allowed and 35mm for the glow plug . Minimum distance between holes is 5mm . See drawings

Proposal

Body Rules
Bodies must be commercially available 1/8th scale GT1, GT2, Super GT, DTM, or V8 Supercar cars, 2 door GT bodies ……

An additional hole for refueling in the roof of 50mm is allowed and 35mm for the glow plug . Minimum distance between holes is 5mm. An extra hole for ty-rap to open tank in the front windscreen will be allowed, max. 10mm See drawings

Remarks

The reason to add this rule is to continue in the way that IFMAR is following. This rule will be added for first IFMAR WC GT8 in Miami.

Proposed by: EFRA, Garcia Javier

Proposal Status:

Amended to add max. diameter of the hole in the body. 10 mm max. Amended seconded by Belgium

Seconded by: Croatia o Not Seconded

The proposal: o Passed Unanimously o Passed with .... for, ... against and .... abstentions.

o Rejected with .... for, ... against and .... abstentions. o Amended

---

Current Rule

11.8.

FLAT PAN CLASS (4wd Without Suspension)
Fixed chassis cars without any moving suspension components. No dampers allowed, or springs . No oil may be used other than on bearings/belts and drivetrain.

Proposal

FLAT PAN CLASS (4wd Without Suspension)
Fixed chassis cars without any free moving suspension components. No dampers allowed, or springs . No oil may be used other than on bearings/belts and drivetrain. The one speed transmission shall be direct from the motor to the rear axle and only one timing belt shall be from the rear to the front axle. On the front axle there can be a floating plate. Camber, toe, caster can be adjustable but may not change free during driving. The rear axle must be solid and straight. The rear bulkheads must be mounted directly to the main chassis plate without any linkage system or extra floating plate.

Remarks

The Flat Pan Class shall not get complicated or. Therefore avoid free moving suspension parts, dampers and further linkage systems!

Proposed by: OFMAV, STEINBOCK Gerhard

Proposal Status:

Seconded by: Belgium o Not Seconded

The proposal: o Passed Unanimously o Passed with .... for, ... against and .... abstentions.

o Rejected with 2 for, 7 against and 4 abstentions. o Amended

---

Current Rule

11.10.

The brushless motor (Maximum of 2200kv) and speed controller combination must be or have been previously commercially available and have a maximum Euro recommended retail price (RRP) of 350 euro including all taxes. The motor must have a 5mm pinion shaft.

Proposal

The brushless motor (Maximum of 1950kv) and speed controller combination must be or have been previously commercially available and have a maximum Euro recommended retail price (RRP) of 350 euro including all taxes. The motor must have a 5mm pinion shaft.

Remarks

The motor limit with 1950kv is more than enough for this class!

Proposed by: OFMAV, STEINBOCK Gerhard

Proposal Status:

Seconded by: Switzerland o Not Seconded

The proposal: o Passed Unanimously o Passed with .... for, ... against and .... abstentions.

o Rejected with 1 for, 2 against and 10 abstentions. o Amended

---

Current Rule

11.16.

FINALS
1. Durations for finals will be: 7 minutes + last lap (flat pan cars) and 5 minutes + last lap (suspension cars) .
……

Proposal

FINALS
1. Durations for finals will be: 5 minutes + last lap (flat pan cars) and 5 minutes + last lap (suspension cars) .
……

Remarks

The duration of 7 minutes is too long to be realistic even with flat pan cars - too much stress on batteries.

Proposed by: OFMAV, STEINBOCK Gerhard

Proposal Status:

Seconded by: Netherlands o Not Seconded

The proposal: o Passed Unanimously o Passed with .... for, ... against and .... abstentions.

o Rejected with .... for, ... against and .... abstentions. o Amended

---

10. ELECTION OF SECTION CHAIRMAN.

The position of Section Chairman for 1/8th section is due for election.

Mr Javier Garcia is willing to restand and Alain Levy is willing to apply for the position of 1/8th Section Chairman. After introduction of the candidaties, Javier Garcia was elected for next 2 years.

11. ANY OTHER BUSINESS.

12. ITEMS FOR GENERAL DISCUSSION.

- Fuel : New fuels are on the market , with specials formulations . From EFRA, we had conversations with different manufactures in the way to find solutions in that matter . Suggestions and find out way to go.

- Bodies : Last year one of the point of discussion was Bodies . To create GBS for 1/8th IC making new bodies which can reduce downforce and to be more realistic is an option to solve the actual problems and restrictions that we have in 1/8th IC On road. Results of the discussion/proposals with IFMAR in that matter.

- PRO Class & SPORT Class possibilities for the future : If the idea of PRO CLASS & SPORT CLASS work fine next year (if rule passes) we can think and decide for 2021 to start creating technical rules specifically for both classes (handout tires rule , body rules , etc) keeping skills in SPORT CLASS on the focus with low costs and open PRO CLASS as skill and technical competition.

The Section Chairmen thanked all participants for a constructive meeting, and being no further business the meeting was closed at 18,07